DRAWING
NOT TO SCALE

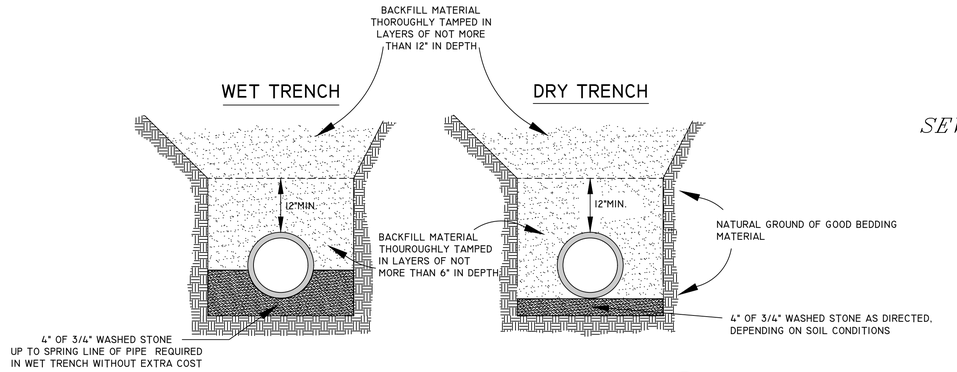

DETAILS OF SEWER TRENCHES

A / D-2

SEWER PIPE JOINT MATERIALS

CONCRETE PIPE-RUBBER GASKET (ASTM C-443)
PVC PIPE- ELASTOMETRIC GASKET (ASTM D-3212 & F-477)

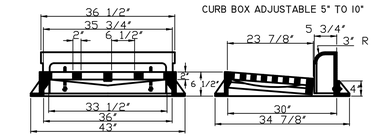

DETAILS OF TYPE "A" CATCH BASIN CASTING
NEENAH R-3246-A OR APPROVED EQUAL

F / D-2

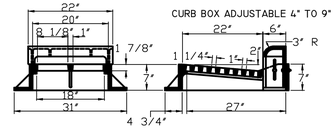

DETAILS OF TYPE "B" CATCH BASIN CASTING
NEENAH R-3234-BI OR APPROVED EQUAL

NOTE: " DUMP NO WASTE DRAINS TO RIVER"

SHALL BE MOLDED IN ALL CASTINGS FACE

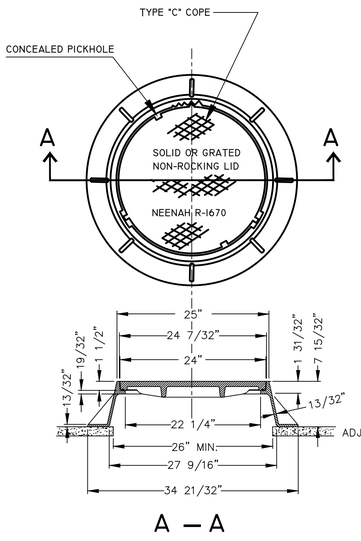

A — A

DETAIL OF MANHOLE FRAME & COVER
NEENAH R-1670 OR APPROVED EQUAL

NOTE
OPENING FOR FRAME & COVER SHALL BE CENTERED ON MANHOLES WITH FLAT TOPS.

B / D-2

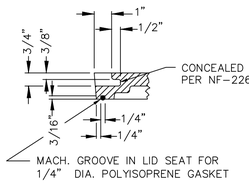

SELF-SEAL DETAIL

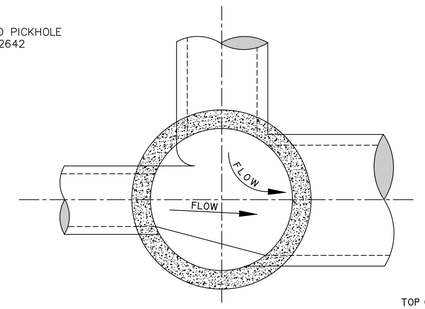

A — A

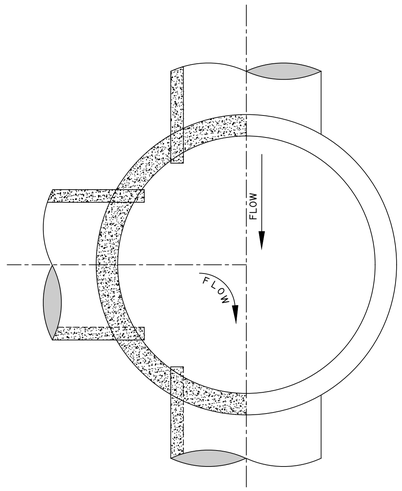

A — A

NOTE (1)
TOP OF MANHOLE TO BE 14" BELOW FINISHED GRADE. ADJUSTMENT TO BE OF PRE-CAST CONCRETE RINGS WITH BUTYL GASKETS (ROPE) BETWEEN RINGS AND MORTER BETWEEN CASTING & TOP RING ONLY. (3/4" MORTER MAX.)

NOTE (2)
STEPS ARE NOT TO BE INSTALLED IN MANHOLES

NOTE (3)
MANHOLE TO BE CONSTRUCTED OF PRE-CAST CONCRETE (ASTM C-478).

NOTE (4)
LIFT HOLES TO BE MANUFACTURED WATER PROOF

NOTE (5)
INVERT TO BE FACTORY MOLDED OR FORMED PER CITY OF LA CROSSE STANDARD SPECIFICATIONS.

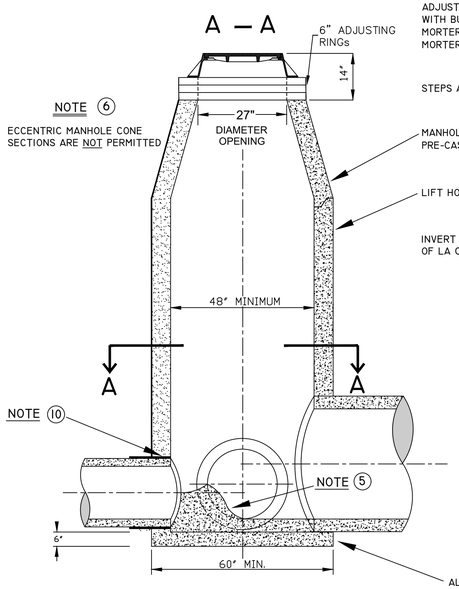

C / D-2 *DETAILS OF STANDARD MANHOLE FOR 30" PIPE OR SMALLER*

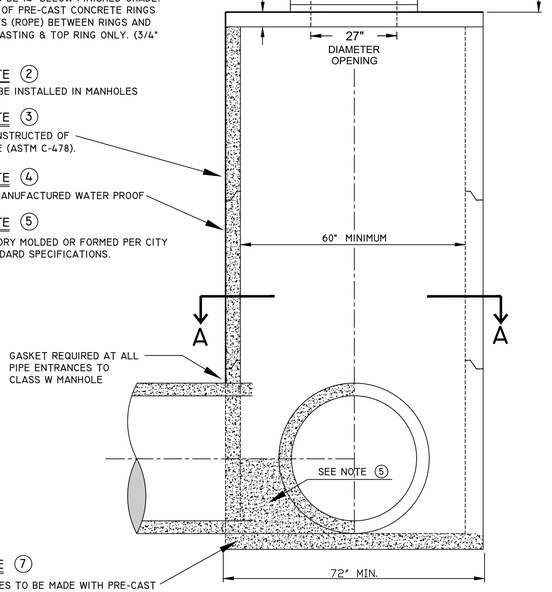

NOTE (7)
ALL STRUCTURES TO BE MADE WITH PRE-CAST INTEGRAL FOOTING BASE. MIN. 6"

D / D-2 *DETAILS OF STANDARD MANHOLE FOR 36" PIPE OR LARGER*

NOTE (8)
RECTANGULAR OPENING IN TOP
"B" TYPE CASTING - 27" X 22"
"A" TYPE CASTING - 36" X 30"

NOTE (9)
TOP OF CATCH BASIN TO BE 12" BELOW CATCH BASIN FLOWLINE GRADE ADJUSTMENT TO BE MADE AS IN NOTE (1)

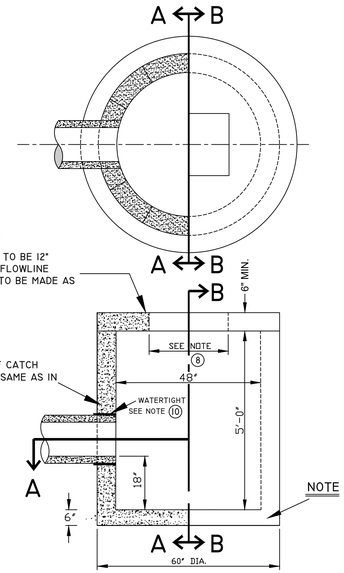

E / D-2 *DETAIL OF TYPE "A" OR "B" CATCH BASIN*

NOTE (10)

THE CONNECTION OF ALL PVC STORM WATER PIPE, SIZE 6" TO 30", TO PRECAST MANHOLES OR OTHER STRUCTURES SHALL EMPLOY A WATERTIGHT, FLEXIBLE PIPE-TO-MANHOLE CONNECTOR

THE CONNECTOR SHALL CONSIST OF A SINGLE RUBBER GASKET, SHALL BE CONSTRUCTED SOLELY OF SYNTHETIC OR NATURAL RUBBER, SHALL MEET/EXCEED THE REQUIREMENTS OF ASTM C 923, AND SHALL HAVE A MINIMUM TENSILE STREGHTH OF 1600 PSI

THE CONNECTOR SHALL BE THE SOLE ELEMENT RELIED ON TO ASSURE A FLEXIBLE, WATERTIGHT SEAL OF THE PIPE TO THE STRUCTURE

STORM SEWER DETAILS

D-2

ENGINEERING DEPT.
City of LaCrosse, Wis.

			BY	DATE
FIELD BOOK	SURVEYED			
NUMBER	DRAWN	PRELIMINARY		
		FINAL		
	CHECKED			
	APPROVED		K.J.C.	11/2025
PAGE	REVISIONS	M.D.F. 3/03 J.M.C. 6/2015	J.M.C.	11/2025
		J.M.C. 9/03 BFM 2/2019	J.M.C.	11/2025
		M.D.F. 4/06 J.M.C. 8/2019		
SCALE: NONE		M.D.F. 12/10 J.M.C. 11/2023		
		M.D.F. 4/13 J.M.C. 11/2024		